CUSTOMER DRAWING

RoHS

HF

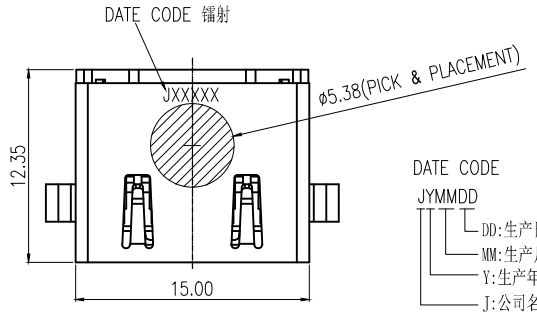

DATE CODE

JYMMDD

- DD:生产日期,按实际生产日期喷码(01~31)
- MM:生产月份,按实际生产月份喷码(01~12)
- Y:生产年份,如2016对应6; 2017对应7;依此类推
- J:公司名(伟聚)

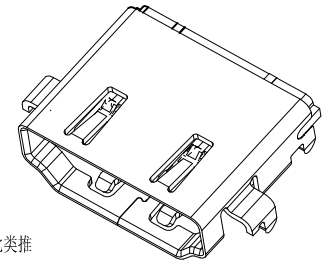

NOTES:

1.MATERIAL:

HOUSING:LCP UL94 V-0, white COLOR

CONTACTS:BRASS C2680

SHELL:S50C

2.FINISH:

CONTACTS:GOLD FLASH PLATED ON CONTACT AREA,2.54um(100u")

MIN. MATTE-TIN ON SOLDER TAIL,WITH ENTIRE CONTACT UNDERPLATED

1.27um(50u")MIN. NICKEL.

SHELL:2.54um(100u")MIN. NICKEL

3.REFLOW SOLDER CAPABLE TO 260°C

4.Durability Test:

5000 insertion/extraction cycles at a maximum rate of 100+/-50cycles per hour .

Insertion Force:4.5kgf Max 25+/-2 mm per minute.

Withdrawal Force:1.0kgf Min 25+/-2 mm per minute.

After 5000 cycles mating :withdrawal force: 0.3~2.5kg.

5. THE" ▲ "MARK SHOWS DIMENSION OF IMPORTANT.

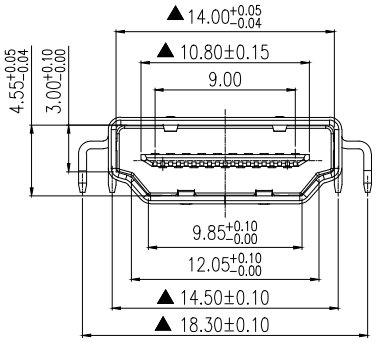

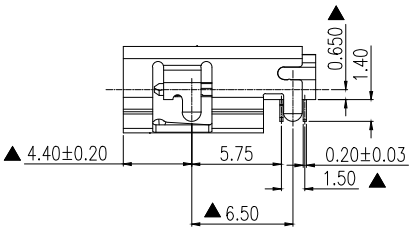

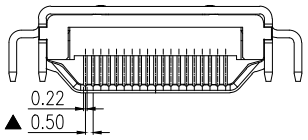

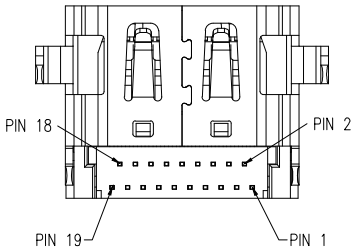

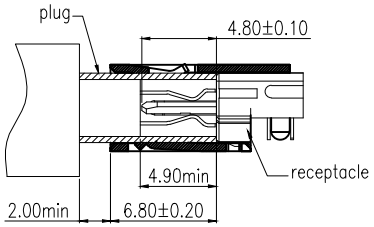

Mated Condition

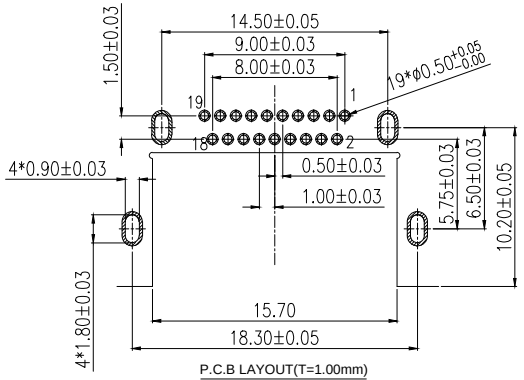

P.C.B LAYOUT(T=1.00mm)

COMPONENT SIDE

Pin #	SIGNAL NAME	Pin #	SIGNAL NAME
1	TMDS Data2+	2	TMDS Data2 Shield
3	TMDS Data2-	4	TMDS Data1+
5	TMDS Data1 Shield	6	TMDS Data1-
7	TMDS Data0+	8	TMDS Data0 Shield
9	TMDS Data0-	10	TMDS Clock +
11	TMDS Clock Shield	12	TMDS Clock -
13	CEC	14	Utility
15	SCL	16	SDA
17	DDC/CEC GROUND	18	+5V POWER
19	Hot Plug Detect		

REV.	REVISION RECORD	DATE
A	INITIAL RELEASE	01/11'2018

UNIT: MM

SIZE: A4

GENERAL TOLERANCES	
LINEAR	ANGLES
0.0 ±0.25	X°REF± 6'
0.00 ±0.15	X° ± 3'
0.000±0.10	X°X' ± 2'

SCALE:	NAME	DATE
APPROVED		
DESIGNER		
DRAWN		

WJCT

苏州伟聚电子科技有限公司

TITLE: HDMI 19P DIP CL=0.65 成品

PART.NO: W-00-6023-1900W

DWG.NO: W-00-6023-1900W

REV: A

SHEET: 1/1